Arc Flash Exercise 4

Purpose & Description

The purpose of this exercise is to get you familiarized with the required input data to perform an arc flash study. The type of data required is for Short-Circuit, Arc Flash and Protective Device settings. This exercise also illustrates important concepts like NFPA 70E incident energy limits and the effect of automatic calculation of the arcing current variation per IEEE 1584 guidelines.

Setup

Load the project file named “ArcFlashExample4”. The solution to this example is located in a directory called “Solution4”. Open the solution project only to compare against your exercise once completed.

Procedure

Step1

Enter all the Arc-Flash required information for the system in arc flash exercise 4. The system is shown below. Please refer to table1 for the required information.

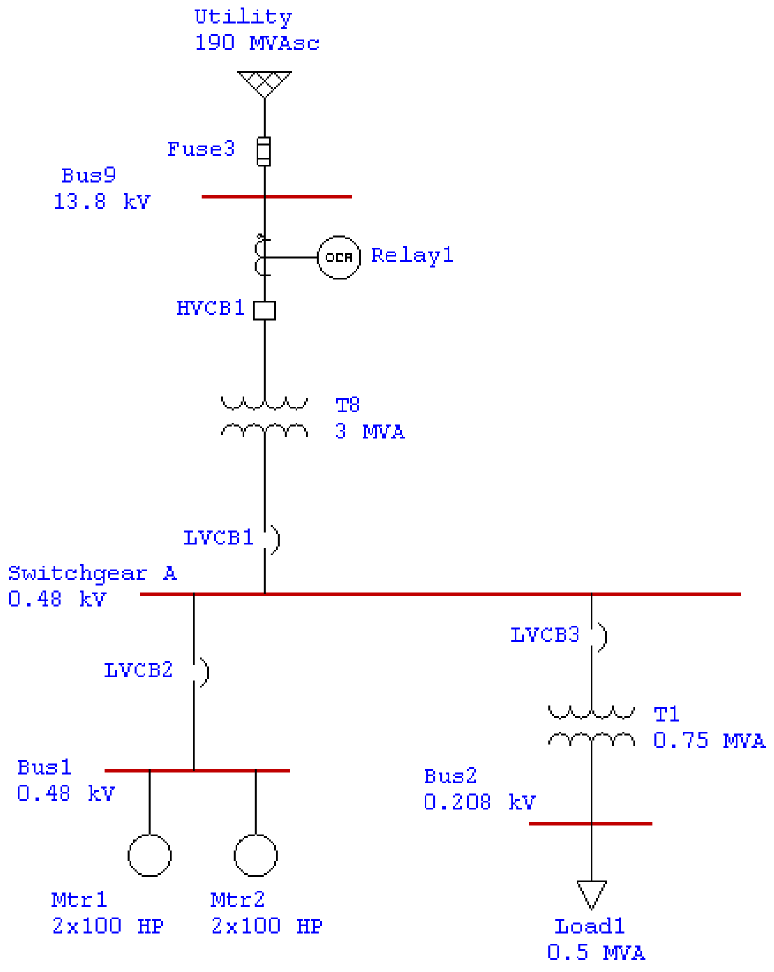
Utility
190 MVAsc
Fuse3
Bus9
13.8 kV
OCR
Relay1
HVCB1
T8
3 MVA
LVCB1
Switchgear A
0.48 kV
LVCB3
LVCB2
T1
0.75 MVA
Bus1
0.48 kV
Bus2
0.208 kV
Mtr1
2x100 HP
Mtr2
2x100 HP
Load1
0.5 MVA

Arc Flash Exercise 4

Table1: Power Grid Parameters

Device ID	Field Description	Value	Required	
Utility	Rated kV	13.8 kV	Yes	
	3-Phase MVAsc	190 MVA	Yes	
	1-Phase MVAsc	190 MVA	No	
	X/R 3-phase	20	Yes	
	X/R 1-phase	20	No	
	Design % Volt	100%	Yes	
	Grounding	Solid Ground	Yes	

Table2: Network Parameters

Device ID	Field Description	Value	Required	
Bus 9	Nominal kV	13.8 kV	Yes	
	Equipment Type	Open Air	Yes	
	Gap between Conductors	153 mm	Yes	
	Limited Approach Exp. Mov. Cond	11 ft.	Yes	
	Limited Approach FCP	6 ft.	Yes	
	Restricted Approach Boundary	2.16 ft.	Yes	
	Prohibited Approach Boundary	0.6 ft.	Yes	
	Distance X factor	2.00	Yes	
	Working Distance	36 in.	Yes	
Switchgear A	Nominal kV	0.480 kV	Yes	
	Equipment Type	Switchgear	Yes	
	Gap between Conductors	32 mm	Yes	
	Limited Approach Exp. Mov. Cond	10 ft.	Yes	
	Limited Approach FCP	3.5 ft.	Yes	
	Restricted Approach Boundary	1 ft.	Yes	
	Prohibited Approach Boundary	0.1 ft.	Yes	
	Distance X factor	1.473	Yes	
	Working Distance	24 in.	Yes	
Bus1	Nominal kV	0.480 kV	Yes	
	Equipment Type	MCC	Yes	
	Gap between Conductors	25 mm	Yes	
	Limited Approach Exp. Mov. Cond	10 ft.	Yes	
	Limited Approach FCP	3.5 ft.	Yes	
	Restricted Approach Boundary	1 ft.	Yes	
	Prohibited Approach Boundary	0.1 ft.	Yes	
	Distance X factor	1.641	Yes	
	Working Distance	18 in.	Yes	
Bus2	Nominal kV	0.208 kV	Yes	
	Equipment Type	Panelboard	Yes	
	Gap between Conductors	30 mm	Yes	
	Limited Approach Exp. Mov. Cond	10 ft.	Yes	
	Limited Approach FCP	3.5 ft.	Yes	
	Restricted Approach Boundary	1 ft.	Yes	
	Prohibited Approach Boundary	0.1 ft.	Yes	
	Distance X factor	1.641	Yes	
	Working Distance	24 in.	Yes	

Device ID	Field Description	Value	Required	
T8	Rated Prim kV	13.8 kV	Yes	
	Rated Sec. kV	0.480 kV	Yes	
	MVA	3 MVA	Yes	
	Max MVA	3 MVA	Yes	
	Pos Sequence Z %	5.75%	Yes	
	X/R Pos Sequence	10.67	Yes	
	X/R Zero Sequence	10.67	Yes	
	Grounding	Delta – Y solid	Yes	
T1	Rated Prim kV	0.480 kV	Yes	
	Rated Sec. kV	0.208 kV	Yes	
	MVA	0.750 MVA	Yes	
	Max MVA	0.750 MVA	Yes	
	Pos Sequence Z %	5.75%	Yes	
	X/R Pos Sequence	3.96	Yes	
	X/R Zero Sequence	3.96	Yes	
	Grounding	Delta – Y solid	Yes	

Table3: Motor parameters

Device ID	Field Description	Value	Required	
Mtr1	HP	100	Yes	
	Rated kV	0.460 kV	Yes	
	Select Manufacturer Typical Nameplate Data	PF% = 92.04 Eff% = 93.52 4 poles	Yes	
	Quantity	2	Yes	
Mtr2	HP	100	Yes	
	Rated kV	0.460 kV	Yes	
	Select Manufacturer Typical Nameplate Data	PF% = 92.04 Eff% = 93.52 4 poles	Yes	
	Quantity	2	Yes	

Table4: Static Load parameters

Device ID	Field Description	Value	Required	
Load1	Rated MVA	0.5 MVA	Yes	
	Rated kV	0.208 kV	Yes	
	%PF	95 %	Yes	

Table5: High Voltage Circuit Breaker Parameters

Device ID	Field Description	Value	Required	
HVBC1	Rated Max kV	15	No	
	Manufacturer	Cutler-Hammer	No	
	Model	150VCP-W1000	No	
	Cycle	5	Yes*	
	CPT	3	Yes*	
	Continuous Amps	1200 Amps	No	

*Required if ETAP is to automatically determine the fault clearing time for this HVCB

Table6: Fuse Parameters

Device ID	Field Description	Value	Required	
Fuse3	Rated Max kV	15.5 kV	Yes*	
	Manufacturer	Cutler-Hammer		
	Model	BA-200 (Condenser)	Yes*	
	Size	200 E	Yes*	
	Continuous Amps	200	Yes*	
	Interrupting	12	Yes*	Not in lib
	Test PF	3.95	Yes*	

*Required if ETAP is to automatically determine the fault clearing time for this fuse.

Table7: Current Transformer Parameters

Device ID	Field Description	Value	Required?	
CT9	Primary Turns	150	Yes*	
	Secondary Turns	5	Yes*	

*Required if ETAP is to automatically determine the fault clearing time for a device connected to this Current Transformer.

Table8: Overcurrent Relay Parameters

Device ID	Field Description	Value	Required?	
Relay1	Input CT	CT9 (Phase)	Yes*	
	Output PD	HVCB1	Yes*	
	Relay Element	Any	Yes*	
	Level/Zone	Any	Yes*	
	Action	Open	Yes*	
	OCR Manufacturer	GE Multilin	Yes*	
	Model	IFC	Yes*	
	Curve Type	Inverse (51)	Yes*	
	Pickup Range	1-12 sec – 5A	Yes*	
	Pickup	12	Yes*	
	Time Dial	2.3	Yes*	
	Inst Pickup Range	30-150 Sec – 5A	Yes*	
	Pickup	100	Yes*	

*Required if ETAP is to automatically determine the fault clearing time for this Relay.

Low Voltage Circuit Breaker Data

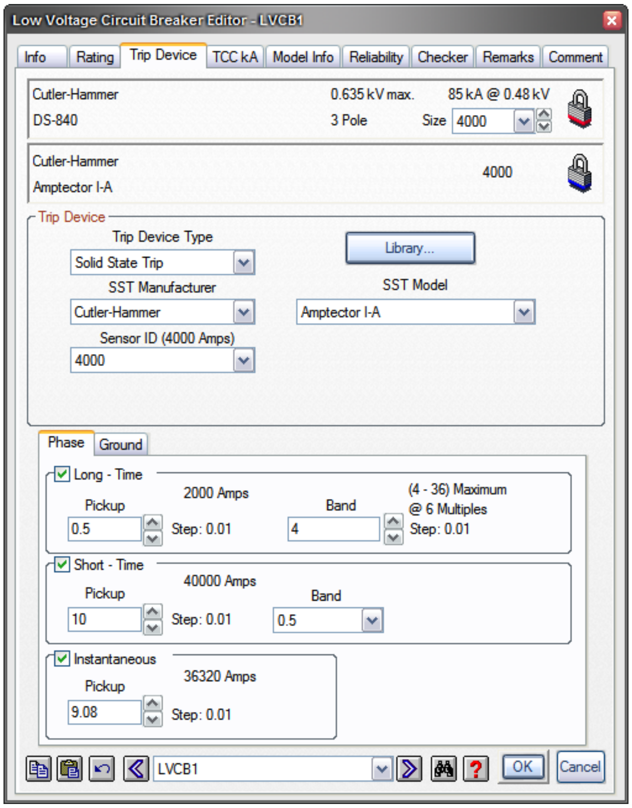
Low Voltage Circuit Breaker Editor - LVCB1
Info
Rating
Trip Device
TCC kA
Model Info
Reliability
Checker
Remarks
Comment
Library...
Phase
Ground
OK
Cancel

Cutler-Hammer 0.635 kV max. 85 kA @ 0.48 kV
DS-840 3 Pole Size 4000

Cutler-Hammer
Amptector I-A 4000

Trip Device
Trip Device Type: Solid State Trip
SST Manufacturer: Cutler-Hammer
SST Model: Amptector I-A
Sensor ID (4000 Amps): 4000

☑ Long - Time
Pickup: 0.5 Step: 0.01 2000 Amps
Band: 4 Step: 0.01 (4 - 36) Maximum @ 6 Multiples

☑ Short - Time
Pickup: 10 Step: 0.01 40000 Amps
Band: 0.5

☑ Instantaneous
Pickup: 9.08 Step: 0.01 36320 Amps

LVCB1

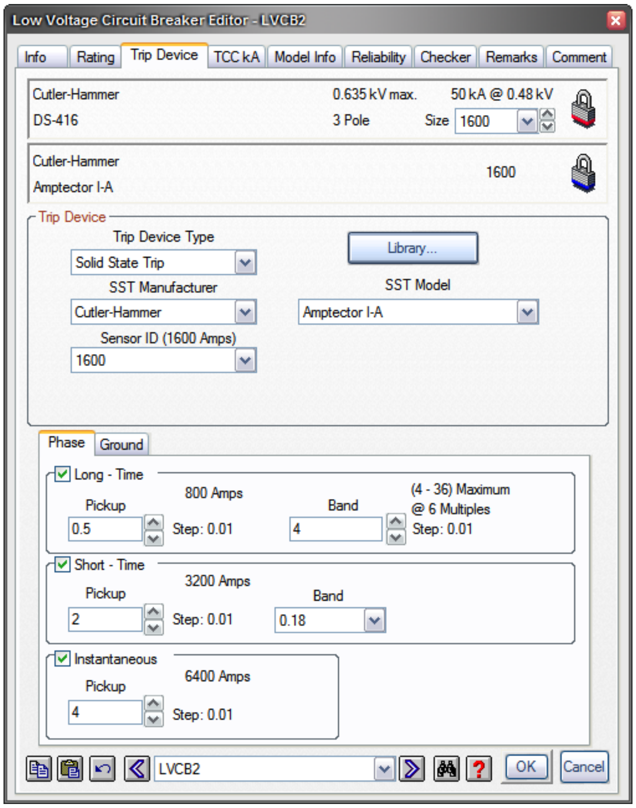
Low Voltage Circuit Breaker Editor - LVCB2
Info
Rating
Trip Device
TCC kA
Model Info
Reliability
Checker
Remarks
Comment
Library...
Phase
Ground
OK
Cancel

Cutler-Hammer 0.635 kV max. 50 kA @ 0.48 kV
DS-416 3 Pole Size 1600

Cutler-Hammer
Amptector I-A 1600

Trip Device
Trip Device Type: Solid State Trip
SST Manufacturer: Cutler-Hammer
SST Model: Amptector I-A
Sensor ID (1600 Amps): 1600

☑ Long - Time
Pickup: 0.5 Step: 0.01 800 Amps
Band: 4 Step: 0.01 (4 - 36) Maximum @ 6 Multiples

☑ Short - Time
Pickup: 2 Step: 0.01 3200 Amps
Band: 0.18

☑ Instantaneous
Pickup: 4 Step: 0.01 6400 Amps

LVCB2

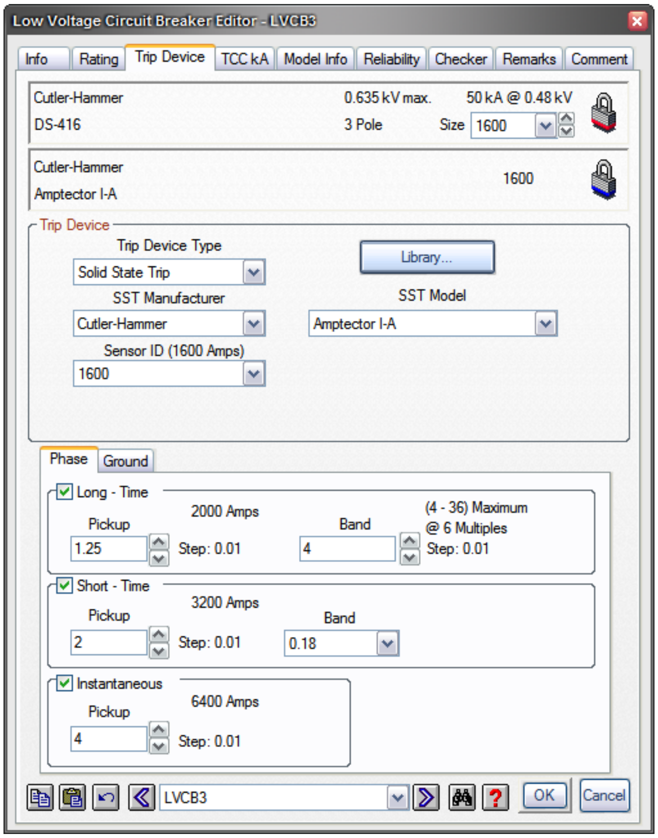
Low Voltage Circuit Breaker Editor - LVCB3
Info
Rating
Trip Device
TCC kA
Model Info
Reliability
Checker
Remarks
Comment
Library...
Phase
Ground
OK
Cancel

Cutler-Hammer
DS-416
0.635 kV max.
50 kA @ 0.48 kV
3 Pole
Size 1600

Cutler-Hammer
Amptector I-A
1600

Trip Device
Trip Device Type: Solid State Trip
SST Manufacturer: Cutler-Hammer
SST Model: Amptector I-A
Sensor ID (1600 Amps): 1600

☑ Long - Time
Pickup: 1.25 — 2000 Amps — Step: 0.01
Band: 4 — (4 - 36) Maximum @ 6 Multiples — Step: 0.01

☑ Short - Time
Pickup: 2 — 3200 Amps — Step: 0.01
Band: 0.18

☑ Instantaneous
Pickup: 4 — 6400 Amps — Step: 0.01

LVCB3

Step2

Setup the following study case settings. Enter the data into Study case “SC”

Device ID	Field Description	Parameter
SC	Use Nominal Tap	Apply
	Include MV Mtr Equip. Cable & OLH	Apply
	Include LV Mtr Equip. Cable & OLH	Apply
	Fault All Buses	Apply
	Standard ANSI	Apply
	Prefault Voltage	100%
	Arc-Flash Method	IEEE 1584
	Arcing Current Variation	15%
	Total Bus Fault current	Apply
	Auto Select Source PD –FCT from TCC	Apply
	System Grounding	OLD connection
	Update Bus Fault Currents	Apply
	Update Bus Fault Clearing Time	Apply
	Update Bus Grounding	Apply
	PPE Hazard/Risk Categories	NFPA 70E 2004

Arc Flash Exercise 4

Step3

Run the arc flash calculation using study case “SC”. Name the output report AF1.

Observe the arc flash analysis results for the low voltage panelboard named “Bus2”. You will notice that there are two warning messages displayed on the one-line diagram results. The first message shows a percent arcing current variation of 85%. The second indicates that the incident energy value has exceeded the NFPA 70E hazard category 4 limits.

3.1 How long does it take LVBC3 to trip in the event of an arc fault at “Bus2”? ________Sec.

3.2 Switch from short-circuit mode to “Protective-device coordination” mode. Run a sequence of events study on “Bus2”. How long does it take LVCB3 to operate? _________Sec.

3.3 Switch back to SC mode and change the arcing current variation in the SC study case to 0%. Re-run the calculation. What hazard category does the program calculate now?

____

Observe the results for a fault at bus “Switchgear A”. The warning message indicates that the calculated incident energy is too high (similar to Bus2).

3.4 If you open the Arc Flash page of Bus “Switchgear A”, which device does the program select as the source protective device?

____

3.5 If you place a bolted short-circuit fault on Switchgear A, which device operates first?

____

Step4

Try to change the current protective device settings or add protective devices as needed in order to reduce the incident energy to a category 2 or 3.